Safety instructions

Safety matters

- Please read this manual carefully before using the product and keep it safe.
- This product is not removable (except for cleaning the water pump and the filter cotton at the water pump).Only the company's authorized maintenance personnel can repair the product

  For maintenance, please do not repair it yourself to avoid accidental injury.
- Note that this product can only be connected to supporting power adapters and must not be mixed with other electronic product adapters.
- During installation or cleaning and maintenance, please disconnect the power supply first.After the cleaning is completed, install and fix the accessories before they can be powered on and used.
- Place the fish tank power adapter in a safe and concealed location to avoid being touched by children.
- When installing, using, and maintaining the fish tank, do not operate with wet hands to avoid electric shock.

Instructions for use

- The cylinder block is made of glass, please do not place this product in a place where it may come into contact with corrosive chemical solvents.
- The upper cover of this product contains electronic components, and it is forbidden to rinse directly with water.If you need to clean, just wipe with a clean towel.
- In the process of fish farming, do not change water in large quantities to avoid affecting the stability of water quality.
- In the process of fish farming, if dead fish are found, please remove them in time to avoid the growth of bacteria and pollute the water quality.
- If you need to place the bottom sand in the fish tank, the thickness of the bottom sand must be lower than the sand retaining plate to avoid clogging the water inlet.

Product introduction

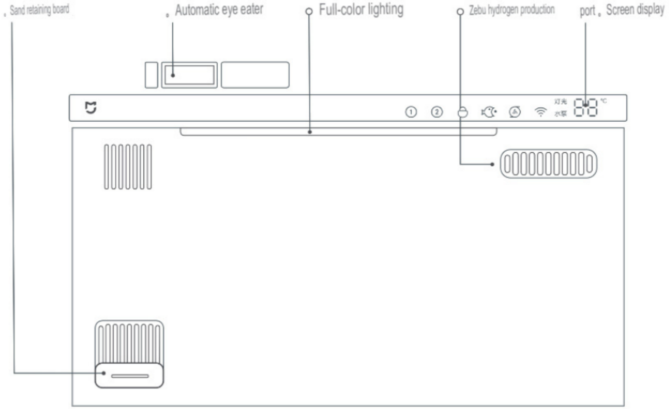

Front view

Functional diagram

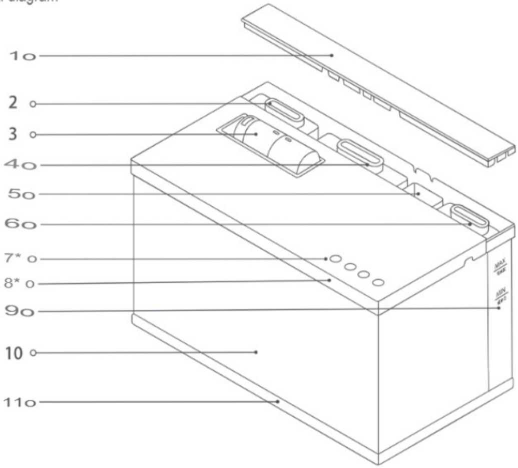

7

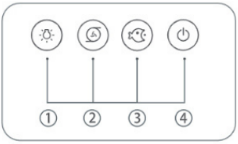

8

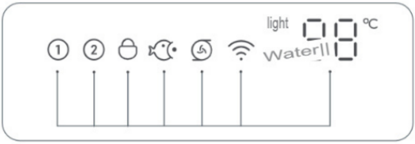

1.Upper cover of green filter compartment :	Hide the module to ensure the overall beauty of the fish tank.
2.Physical filter module	Filter large particles of impurities.
3.Automatic feeder	Two-speed adjustment, with the Mijia APP, can realize remote automatic feeding.
4.Biochemical filter module	Three groups of biochemical filtration were used to cultivate nitrifying bacteria.
5.Reserved compartment for heating module	Reserve the area where the heating rod is placed.
6.Water pump module	Multifunctional water pump, which can realize one-key drainage function.
7.Touch button	①Light button (2 water pump button 3 feeding button (4 power button

8.Smart display	From left to right, the filter material indicator light 1, the filter material indicator light 2, and the button lock Indicator light、 Feeder indicator light, water pump indicator light, Wi-Fi indicator light, digital display area.
9.Water level line	The highest water level of MAX and the lowest water level of MIN.
10.Glass cylinder block	Jinjing five-wire ultra-white glass, high-definition and translucent.
11.Suspension base	It is designed with a floating base, which is convenient for users to carry the fish tank.

Note: Please do not place any products other than heating rods in the reserved compartment of the heating module. It is recommended to purchase the official recommended heating rod.

Product accessories

Physical filter module

Biochemical filter module

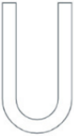
Drain pipe

Power adapter

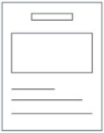
Fish Farming Knowledge Card

Manual

install

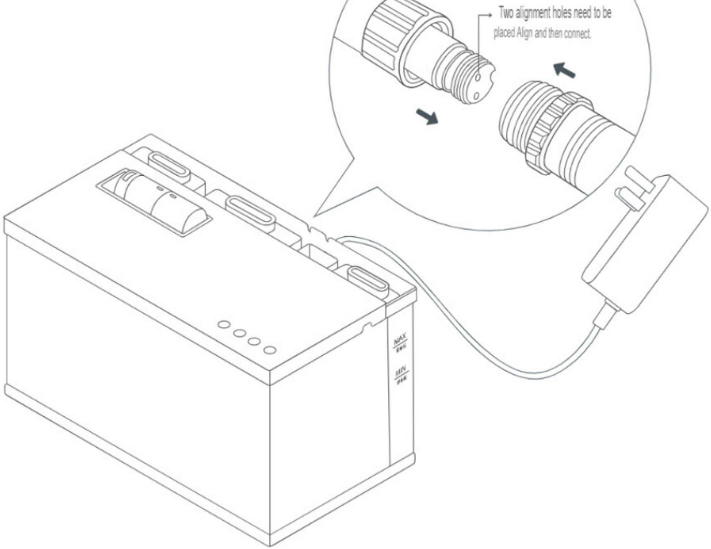
Two alignment holes need to be placed Align and then connect.
MAX
MIN

Schematic diagram of waterproof plug connection

Please follow the illustration to connect the waterproof plug, and after plugging in the power adapter, you can power the fish tank.

use

01.Prepare before use

Tip: The biochemical filter module and the physical filter module have been installed, and there is no need to disassemble and assemble for the first time.

1.Place the fish tank in the living room, office, porch and other areas away from direct sunlight.

2.Before using the new fish tank, clean the fish tank and thoroughly disinfect it.

3.When opening the tank for landscaping, as shown in the figure below, open the upper cover of the fish tank up 90° and snap it on the slot of the back filter compartment.,

You can flip the upper cover.When flipping the upper cover, do not pull the power cord at the connection of the upper cover hard.

4.Strictly follow the prompts of the water level line on the back filter plate of the cylinder block and inject water into the cylinder.

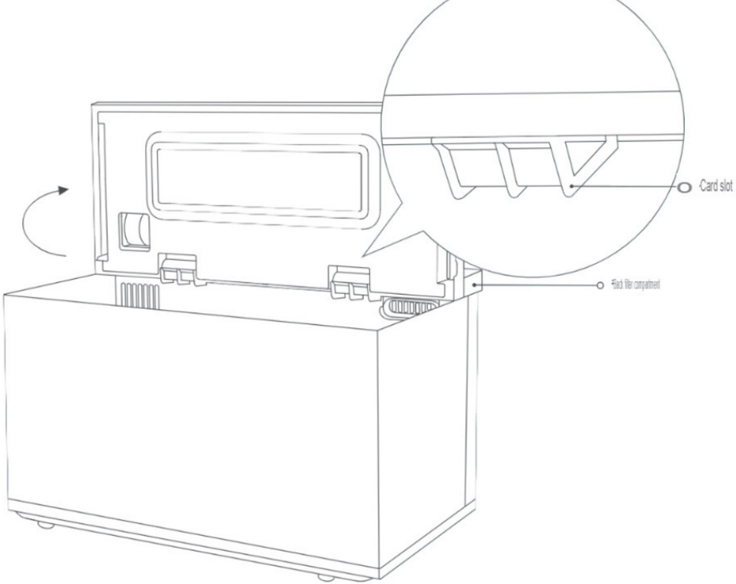

Schematic diagram of flipping the upper cover

02.Turn on，

Press and hold the power button for 3 seconds to turn on/off.

03.Touch button description

	name	use
💡	Light button	1.Click to turn on the light or switch the light scene mode (01 South American wind, 02 stream wind, 03 white light, 04 night light mode、 05 daylight, 06 streamer, 07 aquatic lamp) 2.Press and hold for 3 seconds to turn off the light
🌀	Water pump button	1.Click to turn on the water pump or switch the water pump gear (01 gear, 02 gear, 03 gear) 2.Press and hold for 3 seconds to turn off the water pump
🐟	Eye food button	1.Click to feed once； 2.Press and hold for 7 seconds to switch the child lock
⏻	Power button	Press and hold for 3 seconds to switch on and off
	Combination button	1.Press and hold the light button + feeding button for 7 seconds to restore the distribution network mode 2.Press and hold the light button + feeding button + water pump button to resume after 7 seconds Factory mode Note: When the upper cover of the fish tank is turned up at an angle greater than 15 degrees, the light The buttons and feeding buttons are disabled to prevent accidental touch when the cover is flipped.

04.Smart display description |

①	-Changliang: Expired filter material Huang extinguished: the filter material has not expired	②	Changliang: Expired filter material Niang extinguished: the filter material has not expired
🔒	Changliang: The child lock is turned on Extinguish: the child lock is closed Flashing: Because the child lock is turned on, the button operation is invalid.	🐟	Mother extinguished: free/feeding Flashing: Eye food fails to blink for 30 seconds
	Changliang: The water pump is turned on Off: not connected/off Flashing: abnormal work (Low water level/stall/failure) After the abnormality is lifted, the water pump needs to be turned on again	📶	Changliang: The device is online Off: Wi-Fi is turned off, need to be re- Restore the distribution network. Flashing: pending distribution network, networking, 断net

05.Digital display description |

light 88 water 泵	Water pump + digital long light: display water pump gear Light + digital long light: display the serial number of the light scene Flip the lid and turn off the lights: When the angle of turning the lid is greater than 15 degrees, the lights will automatically go out to avoid eye injury.
88 'C	Long light: shows the current water temperature Extinguished: the water pump plug is not connected Fault: Display E1, E2, E3, E4 error codes
E1-Low water level of water pump	Solution: Please add water above the Min line of the fish tank.
E2-Water pump stall	Solution: 1.Open the back filter compartment cover, disconnect the waterproof plug and remove the water pump module, and Open the water pump compartment. 2.Disassemble the right side cover of the water pump and clean some impurities of the turbofan with water and cotton balls. 3.Assemble the water pump and start the test. If it works, it can be used normally, but it does not work. Please contact after-sales.

E3-Water pump failure	Solution: 1.Confirm whether the water pump is turned on. If it is not turned on, you can click the water pump button to turn on the water pump. 2.Confirm whether the waterproof plug of the water pump is connected normally. 3.Confirm whether the water pump is stuck. If it still does not work after troubleshooting, please contact the after-sales service.
E4-Temperature probe troubleshooting method: Please contact after-sales service if it does not work.	

06.Distribution network connection

This product has been connected to Mijia, can be controlled by Mijia APP or Xiaoai classmates, and interconnected with other products Interworking.

① Scan the QR CODE, download and install the Mijia APP, the Mijia APP has been installed The user will directly enter the device connection page.

② Or search for "Mijia" in the app store, download and install the Mijia APP. Open the homepage of Mijia APP, click "+" in the upper right corner of the page, according to Add a device as prompted by the APP.

77DD3158

Tip: Due to the upgrade and update of the Mijia APP, the actual operation may be slightly different from the above description, please Follow the current guidelines in the Mijia APP.

07.One-click drainage

The drain pipe is not an assembly part of the product. It is only used when water needs to be changed. Please keep it safe.

Note: Turn off the water pump first to prevent water from overflowing when the silicone plug of the water pump module is opened.

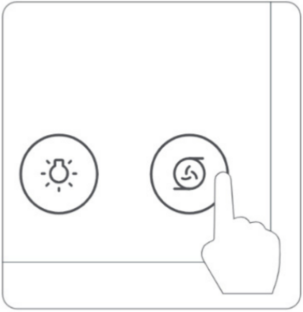

1.Before draining, press and hold the pump button for 3 seconds,

Turn off the water pump or turn off the water pump through the APP.

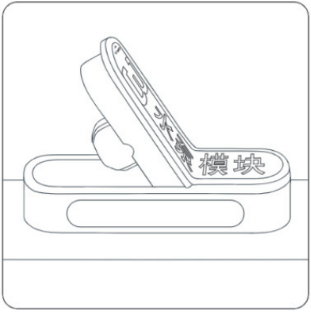

2.Open the upper cover of the back filter compartment,

Lift the silicone plug of the water pump module upward.

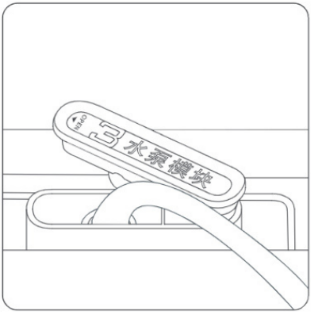

3.Rotate the silicone plug and insert it into the drain pipe.

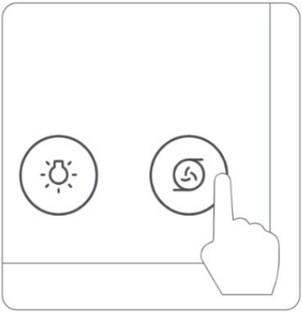

4.Click the water pump button to turn on the water pump and start draining.

Maintenance and maintenance

01.Cleaning of fish tank ¦

- If there is dirt on the surface of the cylinder block, use a soft cloth cover and wipe with a small amount of water.
- Dirt or algae appear in the tank wall during use, please use a professional algae scraper (need to be purchased separately)

Cleaning or biological algae removal (you need to purchase 2-3 5-7cm golden moss rats or 10-20 black shell rats).

Note: Do not use gasoline, kerosene or other corrosive and volatile chemical solvents for cleaning, otherwise it will seriously damage the cylinder block. Appearance and internal structure.It is forbidden to use tap water to directly scour the upper cover (including electronic devices). When cleaning, make sure that the fish tank is closed. The machine is in state, and the power adapter has been unplugged, otherwise it may be electrocuted or cause serious failure due to water in the electronic devices.

02.Maintenance of filter media

- The physical filter module is recommended to be replaced every 3 months.
- The biochemical filter module (one piece each for red, white and gray) is recommended to be replaced once every 6 months.

Tip: When using the filter module, do not use fungicides. The filter material that uses fungicides cannot be cultured again.The number of changes of filter media and Fish size, density, and feeding volume are closely related, and the frequency of replacement of filter media can also be adjusted according to the fish tank's own situation.

03.Cleaning of water pumps

The water pump and the filter cotton at the water pump need to be disassembled and cleaned regularly.Long-term use of water pumps, turbines and rotors It is easy to accumulate impurities, such as fish stools, rotting aquatic plants, residual feed, etc., which may cause water. The water flow of the pump decreases, the operating temperature increases, the noise increases, and even stops working.Clean the water regularly The filter cotton at the pump can extend the service life of the pump.

Tip: It is recommended to clean the water pump and the filter cotton at the water pump once every two months, open the protective cover of the water pump, remove the partition, and use a wet cotton swab. Clean the inside of the water pump and the silicone tube, and clean the filter cotton at the water pump with clean water.

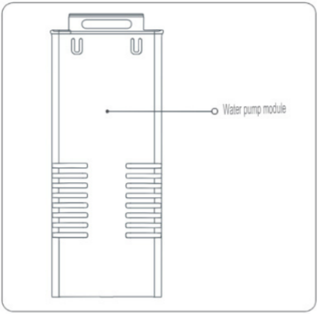

1.Turn off the pump button, And remove the water pump module.

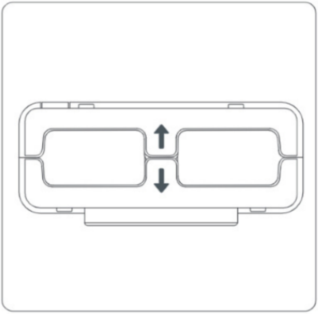

2.After removing it, follow the instructions at the bottom of the module, Disassemble the module housing.

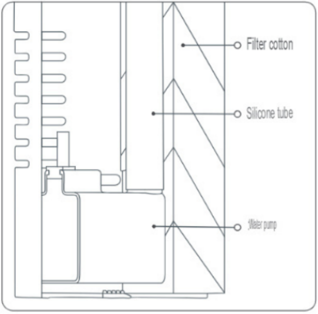

3.After separating the water pump and the silicone ;tube, Clean up the water pump and silicone tube, as well as the filter cotton.

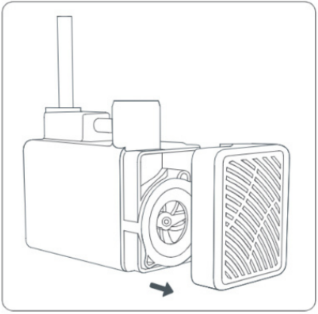

4.After removing the pump, Open the protective cover of the water pump.

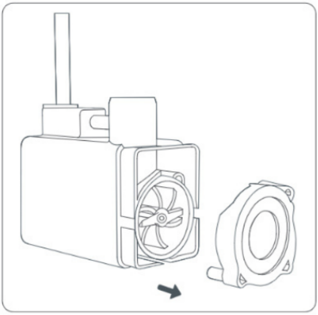

5.Take out the partition and clean the turbine with stages and cotton balls, After removing the impurities, rinse the inside of the pump with clean water.

Little knowledge of fish farming

01.What kind of fish is suitable for Mijia smart fish tank?

Novice breeding is recommended for Banma, lamp fish, guppy, Mary, colorful skirt, pearl fish, red swordfish, etc. Easy-to-survive fish.

02.How many fish are suitable for raising?

The maximum capacity of Mijia smart fish tank is 20L, and it is recommended to raise 10-15 adult fish of 5-6cm size., It is recommended to raise 6-9 adult fish of 6cm-8cm size, and 3-5 adult fish of 8-12cm size.

Tip: Due to the different species of fish, the water quality environment, breeding methods, temperature, living habits, eye food methods, etc. are different., It is not recommended to mix fish bodies with large body size differences in the same tank.

03.Correct way to open the cylinder：

1.Cleaning the fish tank

It is recommended to wipe the inner wall of the glass with alcohol cotton first, and then rinse with water.

2.Due to water (the following three methods can effectively remove oxygen from the water)

- Anti-drying method: Place tap water in a container and use it after 24-48 hours of exposure to the sun.
- Explosive oxygen method: Use an air pump to treat the water with explosive oxygen, and it can be used in 8-12 hours.
- Deoxygenation agent: Put an appropriate amount of deoxygenation agent into the water and use it after 3 hours. Note: Pure water can be used directly.

3.Water filling：

It is recommended to use a small-capacity independent container and pour it slowly and multiple times.Do not use basins or buckets directly facing Pour into the bottom of the fish tank.

4.Release fish

New fish need to be over-heated and over-watered when entering the tank to prevent the fish from experiencing stress reactions and leading to death.

- Over-temperature: Put the packaging bag and the fish together in the fish tank and let stand for 30 minutes.
- Over water:After the temperature is too high, put the water from the fish tank into the packaging bag, and the fish can be placed in the tank after 20 minutes.

Note: Before the new fish is unpacked, it is necessary to observe the state of the living body and whether there are pathological characteristics. If the swimming posture of the living fish is wrong, it is recommended to contact It is a live fish seller, and it will not be processed separately and will not be lowered into the tank.

04.Tips

1.Please change the water in time for the following special circumstances:

- The dead fish were not fished out in time, the corpse was soaked and rotted for a long time, and the water body appeared oily.

- Fish deaths occurred continuously within 5 days.
- The inner wall of the fish tank explodes with algae in large quantities within 3-5 days.
- A large amount of foam or parasites float in the fish tank.

Recommendation: The frequency of water change can be adjusted according to the actual situation. If the temperature is too high, it is recommended to change more water.The water change takes 3 days to complete, and the water change is done every day 1/3.

2.Feeding frequency: It is recommended to eat 2-3 times a week, each time it is controlled to about 3 minutes, you can eat less and more. Meals, please do not feed in large *quantities*.

For example: 15 Banma fish of 3-5cm, the feeding capacity of the feeding warehouse is the minimum gear, and the powder food is fed once in 2 days (the feeder rotates once). 圈）。

Novices in fish farming should remember: pay attention to the number of feedings and the amount of feedings. If the number of feedings is too high, the fish will easily die.The amount of feeding is too large, the fish can't finish eating, It is easy to pollute water quality.

Note: Do not place fish food, live food and wet food with a diameter greater than 2mm to prevent clogging of the food outlet.

3.The feeder is adjusted in two gears, and the feeder gear can be adjusted according to the amount of food in the fish tank.

4.Do not turn on the lights or place them in the sun for a long time to prevent algae blooms in the fish tank and affect the filtration system., Cause dead fish.

5.Dirt or algae appear in the tank wall during use, please use a professional algae scraper (need to be purchased separately) Cleaning or biological algae removal (you need to purchase 2-3 5-7cm golden moss rats or 10-20 black shell rats).

Precautions

01.Usage restrictions |

- Do not place the fish tank near a device that is susceptible to electromagnetic interference.Do not approach other fire sources or heat sources. Keep a distance of at least 30cm or more from the heat source.
- This product is not suitable for use by children, people with physical, sensory and mental defects, unless they are already responsible for their safety The personnel supervise or guide them to use this product.
- Children should be supervised to ensure that they do not use this product
- as a toy. Do not clean and maintain this product without supervision by children.
- It is forbidden to hang the power cord on sharp objects.
- Please do not use accessories other than this product to avoid injury.
- The light source of fish tank lamps is irreplaceable.When the light source reaches the end of its life, the lamps and lanterns should be replaced.
- The light source in the fish tank lamp should be replaced by the manufacturer or its service agent or someone with similar qualifications.

02.During cleaning and maintenance

Warning: Before cleaning and maintenance, unplug or disconnect the power adapters of all appliances in the fish tank.

- Do not immerse the upper cover of the fish tank in water. •

When cleaning or replacing the filter material, the moving cylinder block should be kept stable and should not be tilted to prevent water from overflowing in the cylinder.

- Do not use hard cleaning tools such as steel balls to clean the fish tank and the back of the fish tank.
- When you do not use the fish tank for a long time, please unplug the power adapter; clean the inside of the fish tank and do a good job of moisture-proof、

  Dust-proof and insect-proof protection.
- The table where the fish tank is placed must be cleaned regularly.
- When cleaning the water pump, please disconnect the waterproof plug of the water pump before removing the water pump. You need to pay attention to the water when cleaning the water pump.

  The blade in the pump turbine to avoid scratches.

03.When using a power supply

- Please be sure to unplug the power adapter and disconnect the power supply to avoid electric shock or short circuit and fire.
- If the power cord is damaged, in order to avoid danger, it must be repaired by the manufacturer, its maintenance department or a professional in a professional department.

  The staff will be replaced.
- When moving the fish tank, make sure the power is turned off and the power adapter is turned off.
- It is forbidden to use other extension power cords, and parts that are not designated by the company shall not be used.
- Do not use inferior sockets to connect, so as not to cause a fire.

04.Before using the fish tank

- Water injection is strictly prohibited when inspecting the cylinder block.
- After receiving the fish tank, first check whether the appearance is defective and whether the tank is damaged.

05.When using a fish tank

- In order to achieve the best ornamental effect, the countertop where the fish tank is placed must be flat, and it is best to use a level meter to correct it.
- It is strictly forbidden to place any items on the upper cover.
- It is strictly prohibited to place any items other than landscaping in the tank.
- Do not place any dolls, hand-made and other products with paint attached to the surface in the tank. Long-term soaking will cause living bodies. The

  death of the fish can also cause damage to the surface of the doll and hand.
- All electronic devices in the fish tank need to be waterproof.
- Avoid the fish tank from being energized in an anhydrous state, causing the water pump to idlewild. During normal operation, the water pump must be completely immersed in

  In the water.
- Cylinder body of water please in strict accordance with the standard range of the injection,the water level is too high there is an overflow risk, is too low will cause water to be

unable to Normal circulating filtration.

- When using a fish tank, if the upper cover is not on the top of the fish tank, first put the upper cover of the fish tank correctly into the card slot of the back filter compartment to ensure that the upper cover of the fish tank is not on the top of the fish tank. Hold it fixed, and then put down the upper cover of the fish tank. Please avoid the upper cover of the fish tank from falling into the water during the process of putting it in. After putting it down, Keep the upper cover of the fish tank from moving.
- Do not add any other filter materials to the back filter compartment of the fish tank, so as not to affect the filtration effect of the fish tank and the use of the water pump.

Service *life*

Troubleshooting

fault	Exclusion method :
The water pump is not working	1.Confirm whether the water pump is turned on normally, and click the water pump button to turn on the water pump. 2.Check whether the connection between the water pump and the silicone tube falls off. 3.Disassemble the water pump and check whether the fan blades and turbine are clogged.
The water pump has no water idling and abnormal noise	1.Check whether there is water in the fish tank and whether there is water in the back filter compartment. 2.Regularly clean the water pump and the filter cotton of the water pump silo, and the physical filter module is recommended for three months. Replace it once. Note: If there is water in the fish tank and the minimum water level is exceeded, there is no water in the back filter compartment., Please replace the physical filter module in time. Blockage of the physical filter module will cause the back filter compartment. There is no water.
Water pump outlet Overflowing water/poor drainage	Check whether the water outlet is clogged with mucous membranes and debris, and it needs to be cleaned regularly.
Device not found	1.Turn off the device and then turn it on to ensure that the phone is close to the device. 2.Please check whether the Wi-Fi, Bluetooth, and location functions of the phone are turned on. 3.Please check what state the smart display Wi-Fi icon is in. 4.At the same time, press and hold the light button + feeding button until the Wi-Fi indicator flashes, the meter It shows that it has entered the distribution network mode. 5.If the lamp beads are not on, please check the power cord and make sure it is plugged in.

You can search for devices But the connection failed or no response	The connection is unresponsive, which may be due to the unstable Wi-Fi signal of the mobile phone. It is difficult to connect the device, you can search again and try to connect the device again.

Basic parameters

Product name	Mijia Smart Fish Tank	Product model	MYG100
Product material	red body ultra-white glass, shell ABS material	Rated input	12V== 2A
Product size	446 x 246 x 295mm	Rated power	23W
Product color	Space gray	Product gross weight	8.8kg
Product net weight	7.3kg	Executive standard	Q / YYB 001
Adapter model	AD-0241200200CN-4	Adapter output	12V==2A
Adapter input	100-240V~50/60Hz 0.7A		
Wireless connection	Wi-Fi IEEE 802.11b/g/n2.4GHz Bluetooth low energy		

This device contains a radio transmitter module with the model approval code CMIIT ID: 2021DP6919.